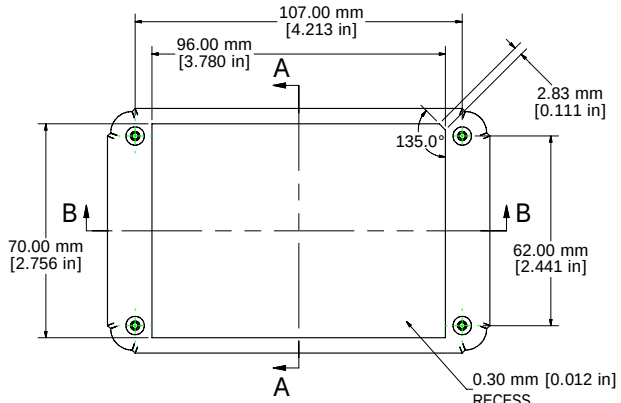

ASSEMBLY - TOP

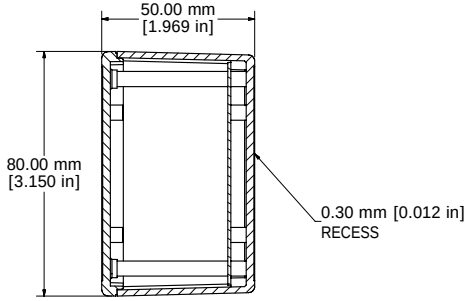

SECTION A-A

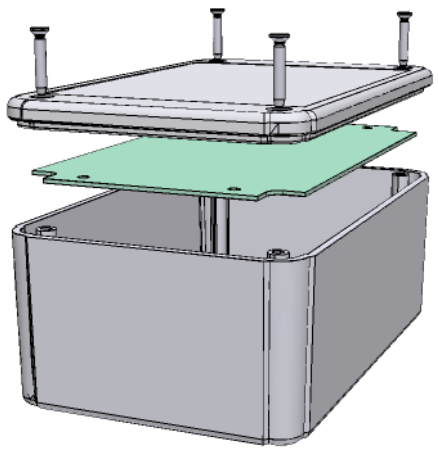

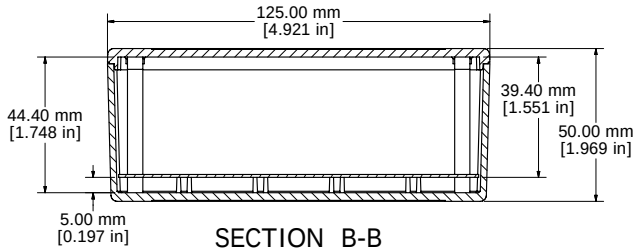

SECTION B-B

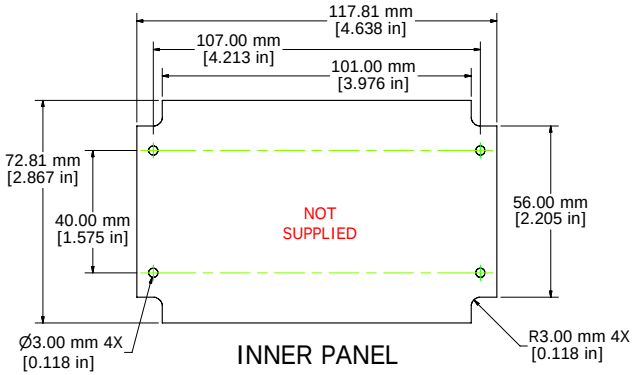

INNER PANEL

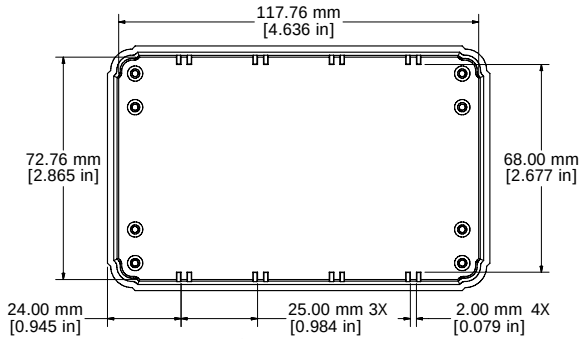

BOX - INSIDE

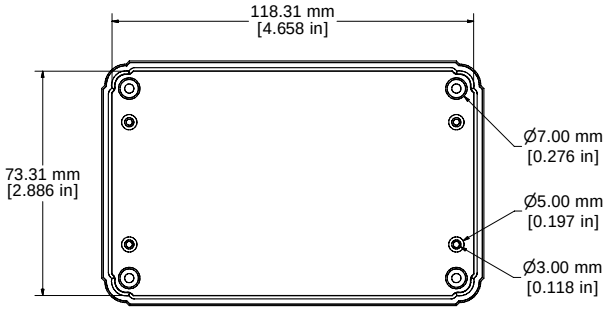

LID - INSIDE

CP- RL6225
Material: ABS (UL94-HB), Light Gray color
Lid Screws: M2.6 x 18
Circuit Board Screws, 4 Supplied (M2.6 self tap)
Suggested Lid Screw Torque: 30 ozf-in (21 cN-m)

combiplast