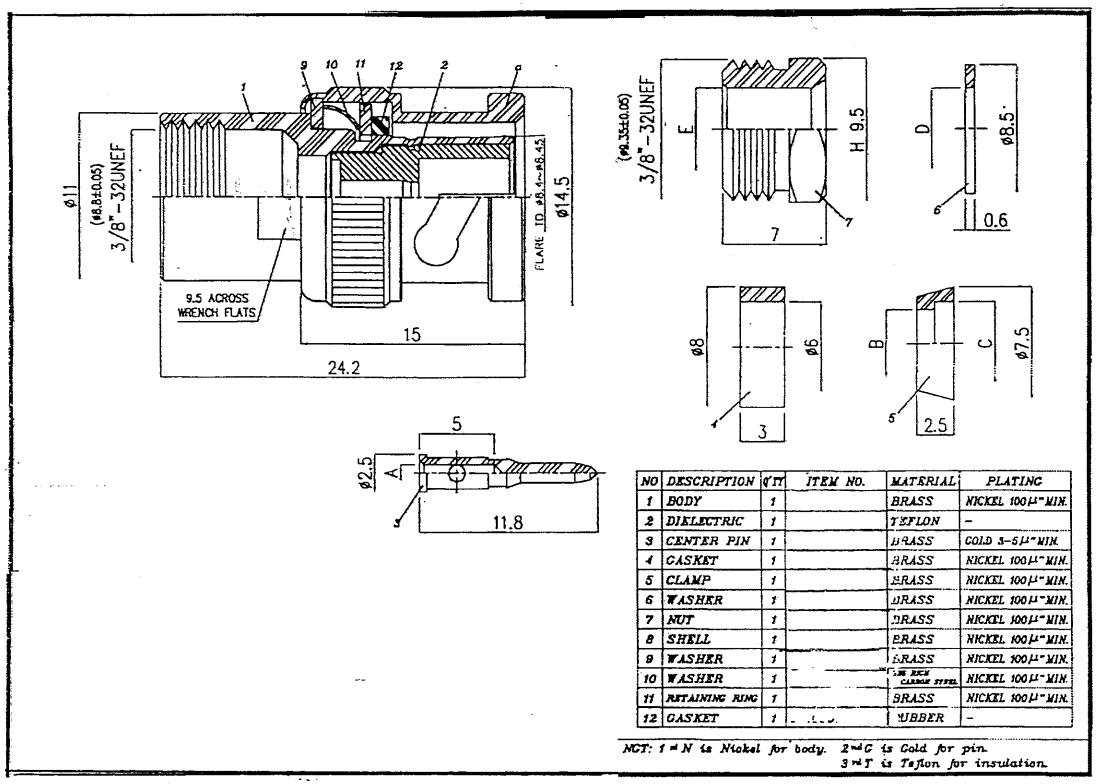

NO	DESCRIPTION	QTY	ITEM NO.	MATERIAL	PLATING
1	BODY	1		BRASS	NICKEL 100μ"MIN.
2	DIELECTRIC	1		TEFLON	–
3	CENTER PIN	1		BRASS	GOLD 3~5μ"MIN.
4	GASKET	1		BRASS	NICKEL 100μ"MIN.
5	CLAMP	1		BRASS	NICKEL 100μ"MIN.
6	WASHER	1		BRASS	NICKEL 100μ"MIN.
7	NUT	1		BRASS	NICKEL 100μ"MIN.
8	SHELL	1		BRASS	NICKEL 100μ"MIN.
9	WASHER	1		BRASS	NICKEL 100μ"MIN.
10	WASHER	1		[illegible] CARBON STEEL	NICKEL 100μ"MIN.
11	RETAINING RING	1		BRASS	NICKEL 100μ"MIN.
12	GASKET	1	[illegible]	RUBBER	–

MGT: 1 = N is Nickel for body. 2 = G is Gold for pin.
3 = T is Teflon for insulation.